Club 964M

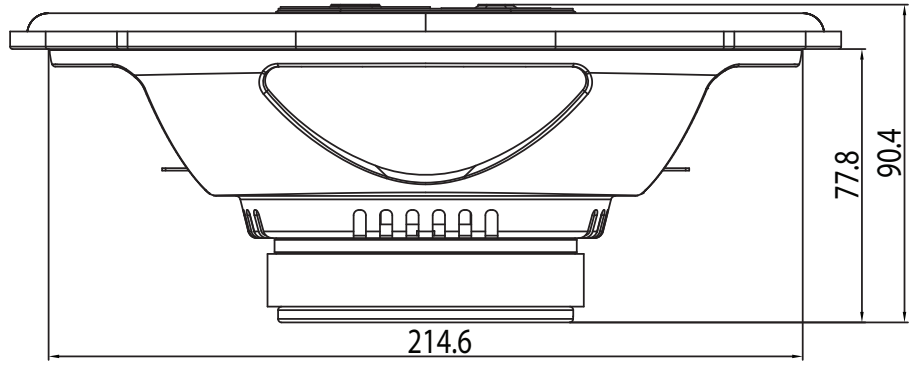

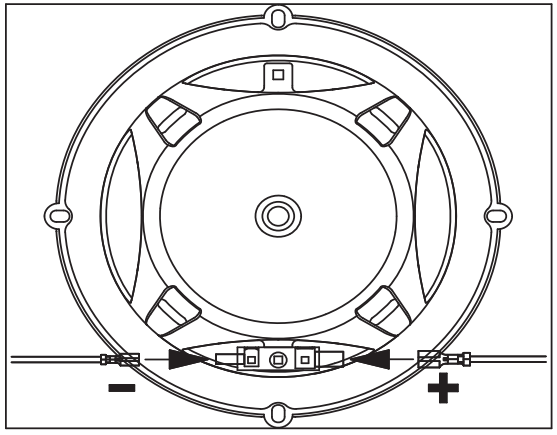

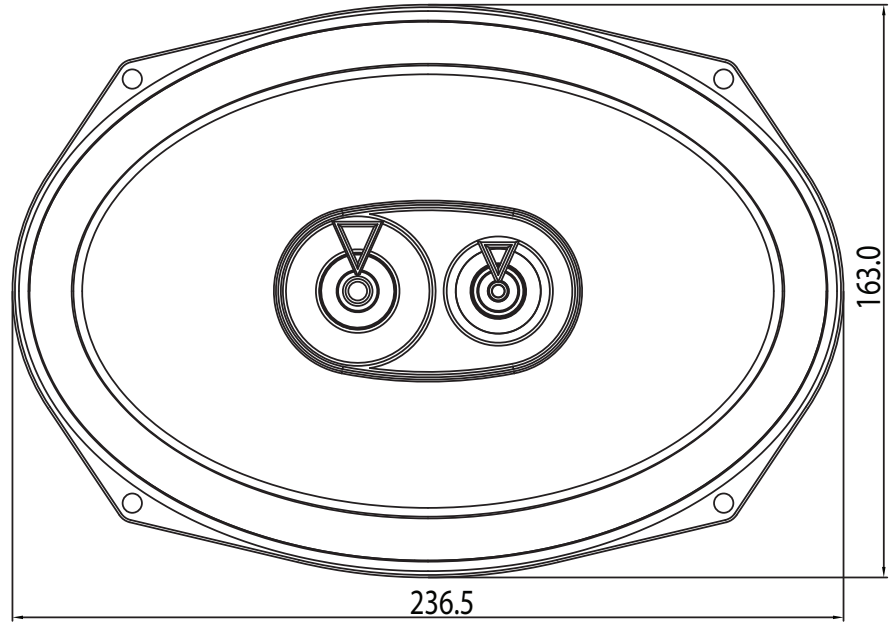

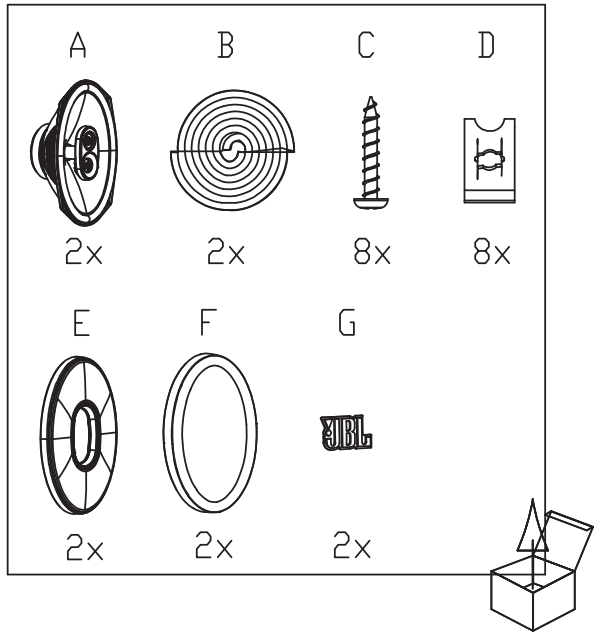
A
B
C
D
2x
2x
8x
8x
E
F
G
2x
2x
2x

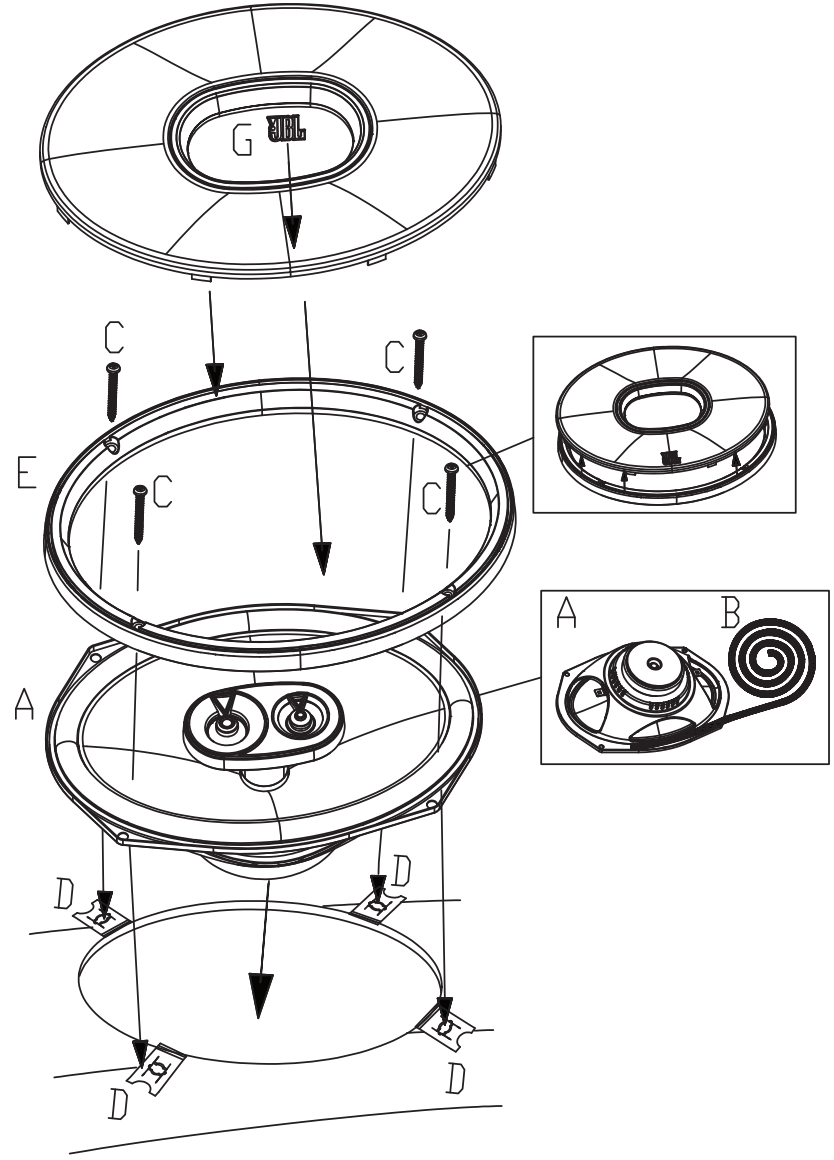
G
C
C
E
C
C
A
B
A
D
D
D
D

Specifications

- Type: 6"x9" (152mm x 230mm) three-way car speaker
- Power Handling: 85W RMS, 255W peak
- Sensitivity (@ 2.83V): 93dB
- Frequency Response: 50Hz – 20kHz
- Nominal Impedance: 3.0 ohms

Thiele-Small Parameters

- BL (Tm): 4.063
- DCR (ohms): 2.63
- Mms (g): 23.163
- Sd (cm2): 226.98
- Cms (µm/N): 0.337
- Vas (l): 24.5866
- Fs (Hz): 56.9
- Qes: 1.321
- Qms: 11.751
- Qts: 1.188
- Crossover Point: 3kHz



HARMAN International Industries, Incorporated, 8500 Balboa Boulevard, Northridge, CA 91329 USA

© 2023 HARMAN International Industries, Incorporated.
All rights reserved. JBL is a trademark of HARMAN International Industries, Incorporated, registered in the United States and/or other countries.
Features, specifications and appearance are subject to change without notice.